150W DALI+PUSH Dimming power supply

Features

- Class II, SELV, Independent
- Input Voltage 220-240VAC
- Protections: SCP/OLP/OTP
- Power Factor: 0.95(Typ.)
- Efficiency: ≥91%(Typ.)
- 5 years warranty
- Support DALI-2, Push Dimming

Applications

- LED strips

Approve

DALI 2 EL CE CB SELV

◆ Description

LS-150-24 DALI2 LI is a 150W constant voltage LED driver that operates from 176-264Vac input with 24V output voltage. With it's compact dimensions from 290 x 45 x 30.5mm. It is easy to integrate in LED strips products. To ensure trouble-free operation, protection is provided against output short circuit and over Load.

◆ Model code

LS-150-24 DALI2 LI

- LI — Flicker-free
- DALI2 — Dimming type
- 24 — Voltage
- 150 — Power
- LS — Series

◆ Specification

Output	Constant Voltage	24VDC
	Current Range	0-6.25A
	Voltage Accuracy	±3.5%
	Output HF current ripple(≥1KHz)	±1%
	Output LF current ripple(≤120Hz)	±1%
	SVM	≤0.4@Full Load
	P_{st}	≤1@Full Load
	Efficiency(Typ.)	≥91%
Input	Rated input voltage	220-240VAC
	Range of input voltage	176-264VAC
	Rated input voltage(DC)	176-280VDC
	Frequency(Hz)	0/50/60 Hz
	Displacement factor	≥0.9
	Power Factor	>0.95
	Input Current max	1A MAX. @Full Load,198VAC
	Start-up time	< 0.5S
	No Load Power	≤0.5W
	Standby Power	≤0.5W
	Network standby power	≤0.5W
	THD (Typ.)	< 10% @220-240VAC, Full load
Dimming	Dimming	YES
	Dimming mode	DALI-2 IEC 62386-101,102,207 & Push Dimming (Corridor Function)
	Dimming depth	1%
	Dimming current range	1-100%
	PWM Resolution	16 bit
Protection	Over Load Protection	105-150% rated output power
		YES/Auto Resume
	Short circuit Protection	YES/Auto Resume
	Over Temperature Protection	YES/Auto Resume
Environment	Operating Temperature	-20℃...+45℃
	Humidity	20%-90%RH
	Tc	85℃
	Storage Temperature	-20℃...+60℃
	Life time	≥50000h@Tc=85℃, full load
Surface	Dimension	290 x 45 x 30.5mm(LXWXH)mm
Standards	IEC61347- 1, IEC61347-2- 13;EN61347- 1, EN61347-2- 13;EN61347- 1;EN61347-2- 13, EN62384;EN55015	
Others	ErP	EU 2019/2020
	RoHS	RoHS (2011/65/EU) (EU)2015/863

Note	1.All parameters NOT specially mentioned are measured at 230VAC input , full load and 25℃ of ambient temperature. 2.Ripple & Noise are measured at 20MHz of bandwidth by using a 300mm twisted pair-wire terminated with a 0.1uF & 47 uF parallel capacitor. 3.The DC input for this product is only used for emergency lighting and applies to functional and safety requirements，EMC is not considered.

◆ Circuit Breaker

I^{peak}	Twidth	B10	B16	B20	C10	C16	C20
47A	**428μs**	3pcs	6pcs	7pcs	6pcs	10pcs	12pcs

◆ Wiring diagram

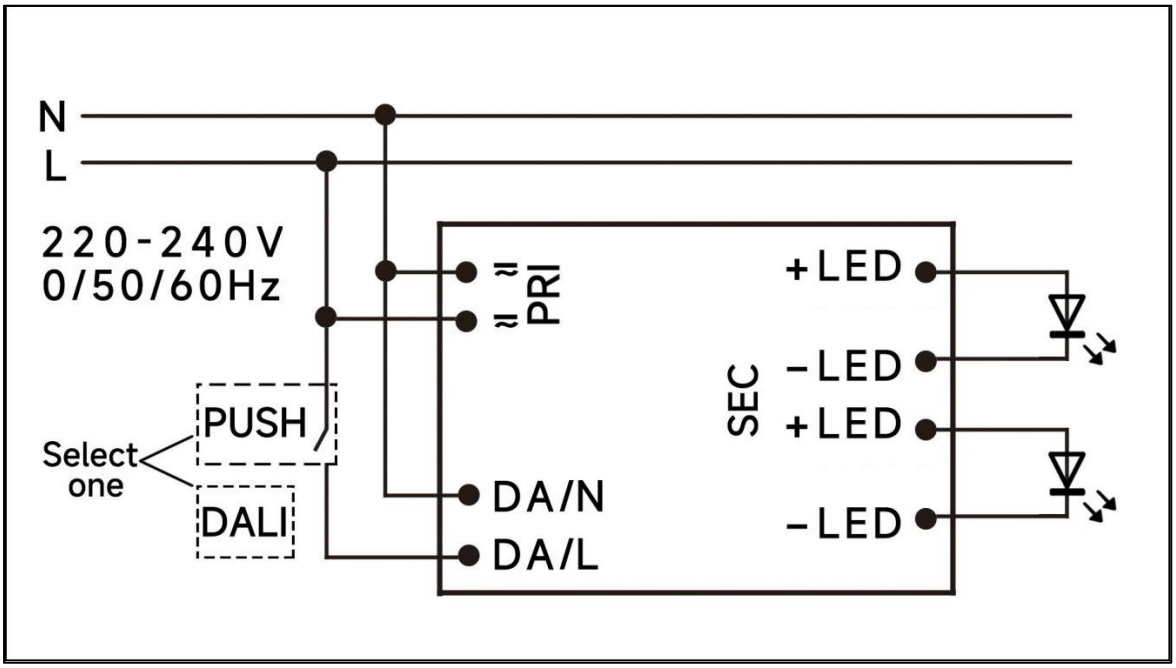

◆ 2D diagram

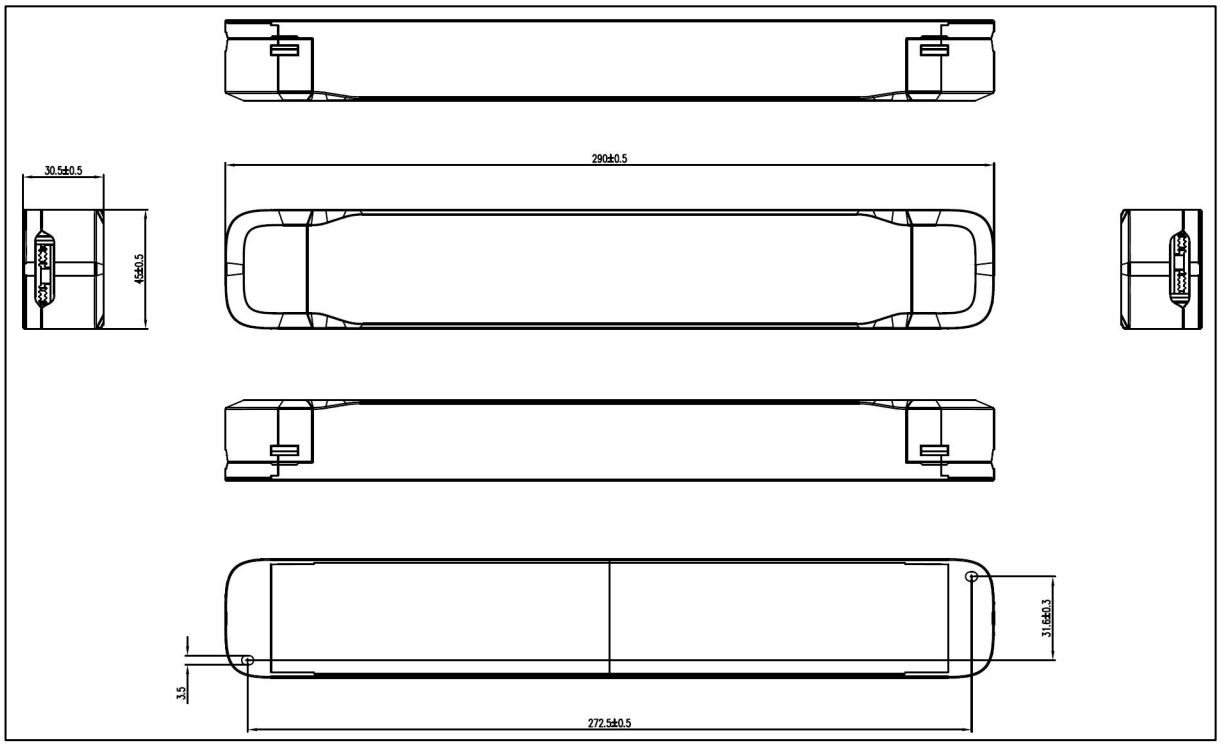

Wiring & Connections

Specification item		Value （Unit ）
Input	Input wire cross-section	0.5...1.5 mm^2
	Input wire gauge.	16...20 AWG
	Input wire strip length	7...9mm
Output	Output wire cross-section	0.5...1.5 mm^2
	Output wire gauge.	16...20 AWG
	Output wire strip length	7...9mm

◆ Curve for LS-150-24 DALI2 LI

Lifetime vs. Temperature Curve

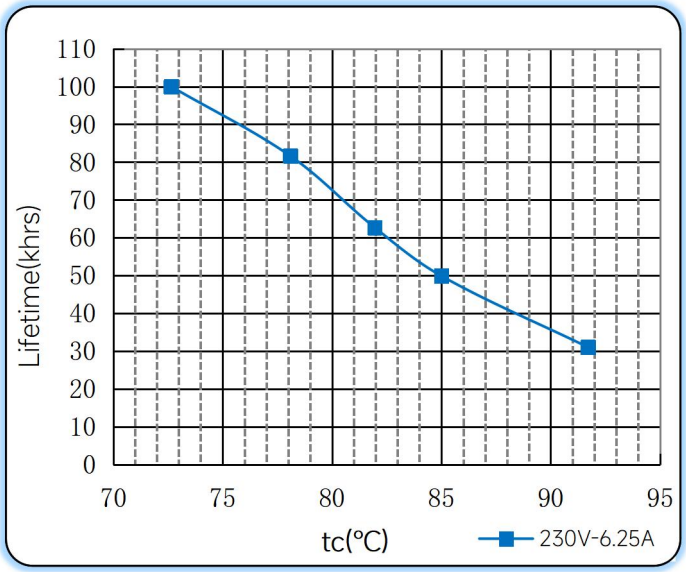

Efficiency vs. Load

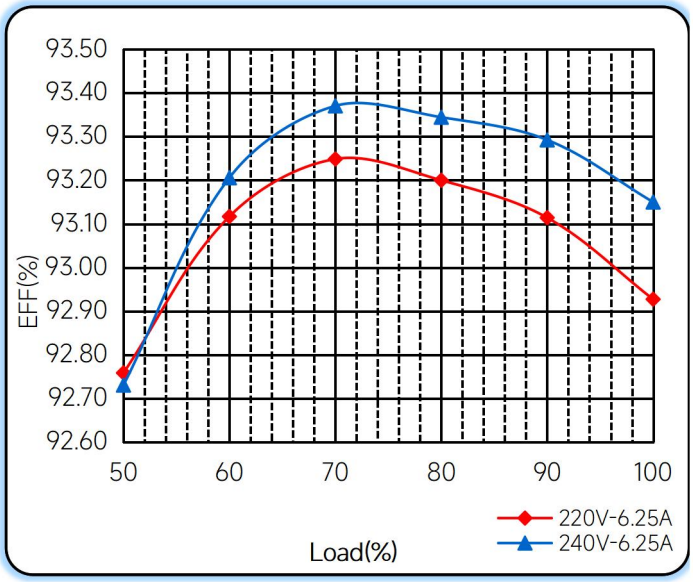

Power Factor Characteristics

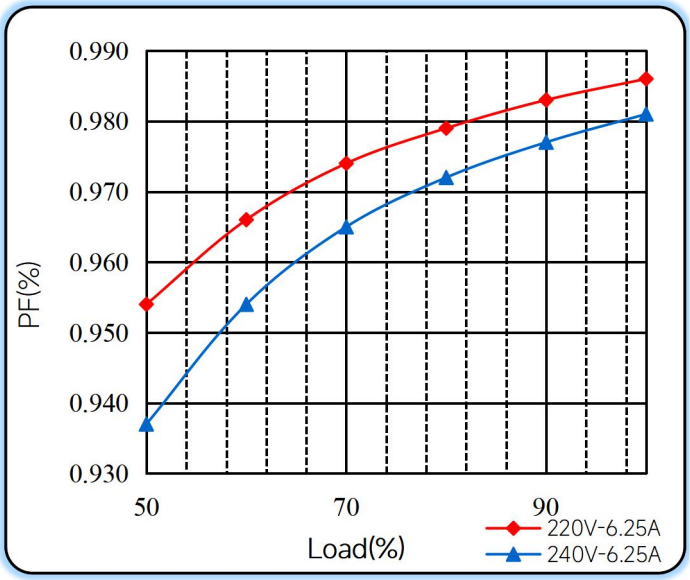

THD vs. Load

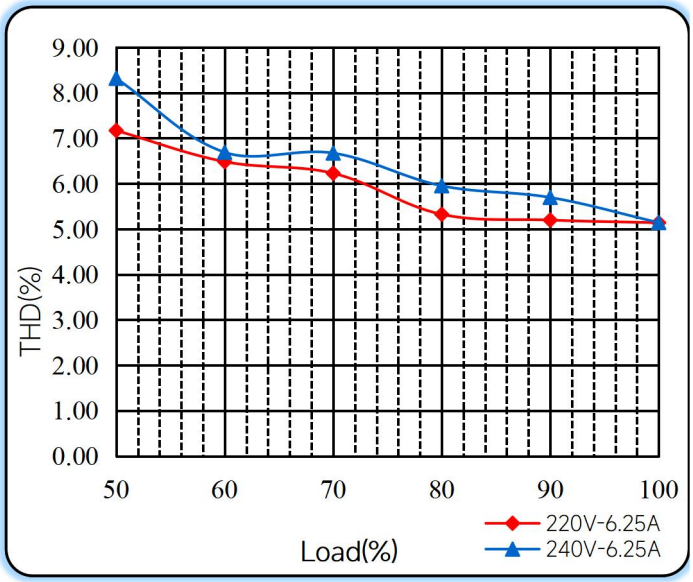

◆ Push dimming operation

Action	Action duration	Function
Short push	<0.5s	Turn on/off
Short push twice	<0.5s	LED on: Save current brightness level LED off: Delete saved level and turn on at 100% brightness
Short push five times	<3s	Quit Corridor mode
Long push	0.5-14s	Dimming up or down
Long push	15s-2mins	Sync all LEDs to be 100% brightness
Long push	>2mins	Enter Corridor mode - LED keep 100% brightness for 2mins. Then brightness will turn to be 10% within 32s if no action during 2mins 100% brightness.

Note:

1.The factory default brightness is at 100%.

2.Up to 30 drivers can perform the PUSH dimming at the same time when utilizing one common push button

3.The maximum length of the cable from the push button to the last driver is 200 meters.

◆ Corridor mode

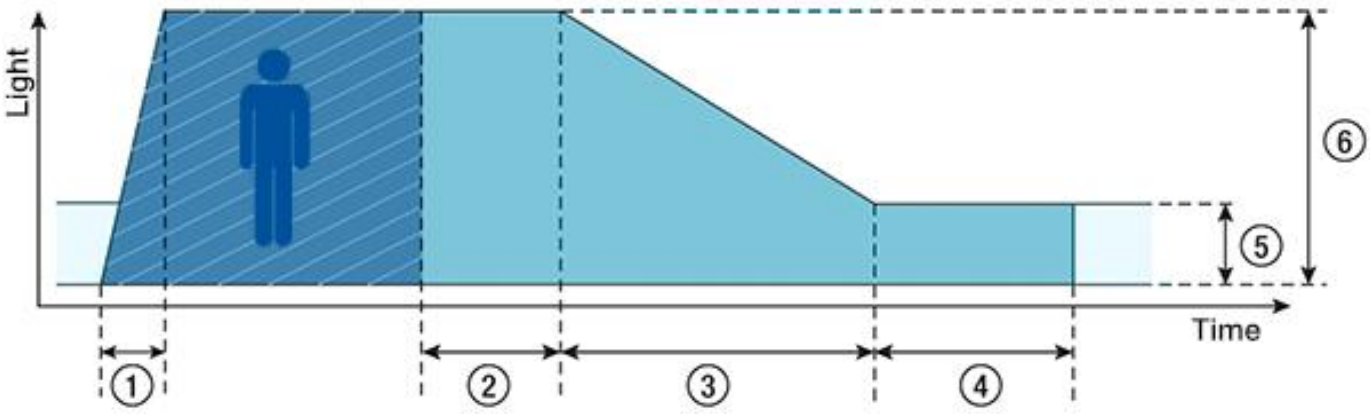

- **①Fade-in time(0.5s):** the time that starts as soon as the presence of a person is detected. During the fade-in time the luminous intensity is faded up to the presence value.
- **②Run-on time(120s):** the time that starts as soon as the presence of a person is no longer detected. If the presence of a person is detected again during the run-on time the run-on time is restarted from zero. If no presence is detected during the run-on time the fade time is started as soon as the run-on time expires.
- **③Fade time(32s):** the time during which the luminous intensity is faded from the presence value to the absence value.
- **④Switch-off delay（Never Off):** the time during which the absence value is held before the lighting is switched off. Depending on the profile selected the switch-off delay may have different values or may not be defined.
- **⑤Absence value(default: 10 %):** the luminous intensity when there is no person present.
- **⑥Presence value (default: 100 %):** the luminous intensity when persons are present.

◆ Operating window

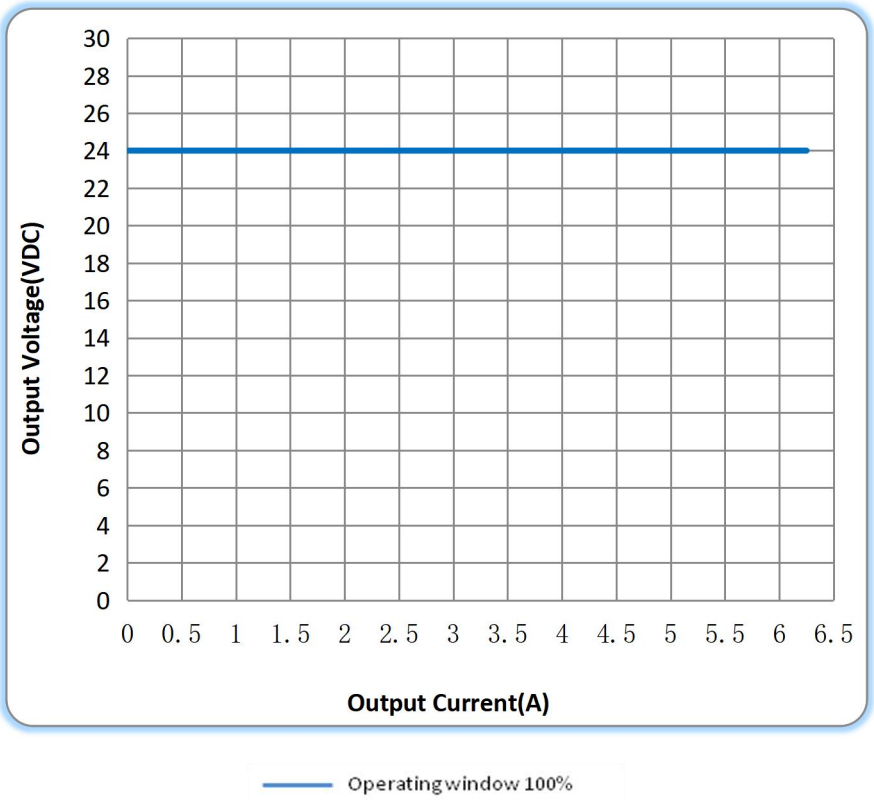

◆ Revision Updates

ITEM	BEFORE	AFTER	VERSION	DATE
Initial			A	2022/02/15
Efficiency	≥89%	≥91%	B	2022/11/09
Protection	OVP	OTP	B	2022/11/09

Tel: +86-0757-86256822, +86-0757-86256831
E-mail: sales@eaglerise.com
Website : https://lighting.eaglerise.com

EAGLERISE Manual